KREMLIN

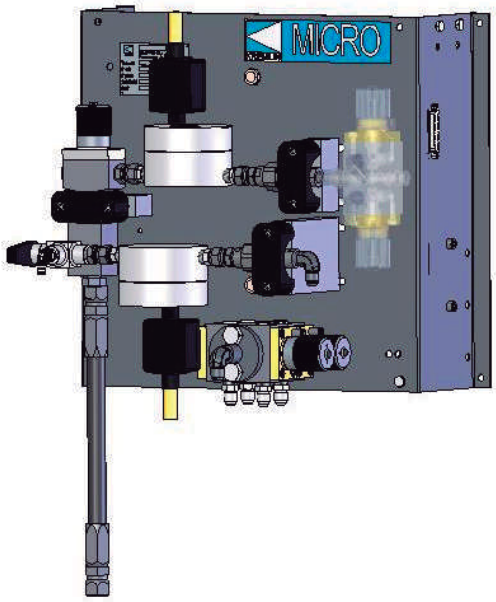

INSTRUCTION MANUAL

CYCLOMIX™

MICRO, MICRO +

MICRO + PH

MIXING MACHINE

Manual : 0707 573.191.112

Date :02/07/07 - Supersede : 11/01/07

Modif.: Cyclomix Micro+ PH + Ground + new parameter (pages 16 & 17) added

KREMLIN REXSON – 150, avenue de Stalingrad
93 245 - STAINS CEDEX - FRANCE
Téléphone : 33 (0)1 49 40 25 25 Fax : 33 (0)1 48 26 07 16

KREMLIN

INSTRUCTION MANUAL

CYCLOMIX™ MICRO, MICRO + & MICRO + PH MIXING MACHINE

SUMMARY

1. Ec DECLARATION OF CONFORMITY 2
2. GENERAL SAFETY INSTRUCTIONS 2
   - INSTALLATION REQUIREMENTS 2
   - EQUIPMENT REQUIREMENTS 3
   - MAINTENANCE REQUIREMENTS 3
   - ENVIRONMENT 4
3. DESCRIPTION 4
4. OPERATING PRINCIPLE 6
5. TECHNICAL FEATURES 7
6. INSTALLATION 8
   - DESCRIPTION OF THE LABEL MARKINGS 8
   - INSTALLATION DIAGRAM 9
   - IMPLANTATION 10
   - CONNECTION OF THE CONTROL BAY AND OF THE FLUID PART 10
7. OPERATING 12
   - DRIVING FROM THE MACHINE 12
   - SWITCHING ON THE MACHINE 12
8. FIRST SWITCHING ON 13
9. FIRST PLACING INTO OPERATION 15
   - FLUSHING OF THE PUMPS AND OF THE MACHINE INTO SOLVENT 15
   - START-UP OF THE MACHINE 15
10. APPLICATION PROGRAMMING (F3) 15
    - PARAMETERS FOR MACHINE WITHOUT CATALYST FLUSHING 16
    - PARAMETERS FOR MACHINE WITH CATALYST FLUSHING 17
    - PRODUCTION (F1) 18
    - MIXING TEST (F-1). 19
    - FLUSHING (F2). 19
    - CONSUMPTIONS/PRINT (F4). 21
11. INDICATIONS GIVEN BY THE LEDS 21
12. MAINTENANCE 22
    - TROUBLESHOOTING 23
    - DIAGNOSTICS 23
13. DISASSEMBLY - REASSEMBLY 25
    - MIXER 25
    - FLOWMETER 25
    - PILOTED VALVES (FLUID VALVES AND TEST VALVES) 26

ADDITIONAL DOCUMENTATIONS :

Annexes	Pneumatic & electric diagrams Mixing ratio chart	Doc. 573.191.120
Spare parts	Cyclomix™ micro	Doc. 573.359.050
	Color changer	Doc. 573.186.111 + 573.187.050 + 573.188.050

Dear Customer, You are the owner of our new CYCLOMIX™ MICRO mixing machine and we would like to take this opportunity to thank you.

To make sure your investment will provide full satisfaction, special care has been taken by KREMLIN during all designing and manufacturing processes. To obtain the best result, safe and efficient operation of your equipment, we advice you to read and make yourself familiar with this instruction and service manual.

1. EC DECLARATION OF CONFORMITY

The manufacturer : **KREMLIN REXSON** with assets of 6 720 000 euros

Head office : 150, avenue de Stalingrad – 93 245 - STAINS CEDEX - FRANCE
Tel. 33 (0)1 49 40 25 25 - Fax : 33 (0)1 48 26 07 16

Herewith declares that : two components mixing machine, is in conformity with the provisions of :

- Machinery Directive (98/37/EEC Directive) and with national implementing legislation
- Low voltage Directive (73/23/EEC and corrections)
- CEM Directive (89/336/EEC and corrections)
- ATEX Directive (94/9/EEC : II 3 G - group II, class 3, gas).

Established in Stains, on March 1st 2003,

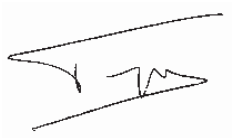

Daniel TRAGUS
President

2. GENERAL SAFETY INSTRUCTIONS

The CYCLOMIX™ MICRO mixing machine shall be installed outside the explosive area. It shall be installed in a safe area (non-explosive area according to the ATEX directive - refer to § 6).

The display unit must be moved 1 m / 3.3 ft away from the fluid module and not be installed above that one.

WARNING : Any misuse of the equipment or accessories can damage them, result in serious body injury, fire or explosion hazard and reduce the equipment working life. Read carefully the safety instructions hereafter.

The personnel involved in operating and servicing this equipment must be aware of all safety requirements stated in this manual. The workshop supervisor must be certain that the personnel has perfectly understood the safety instructions and complies with them.

Read all instruction manuals as well as the tags of the equipments before operating the equipment.

Read local safety instructions and comply with them.

■ INSTALLATION REQUIREMENTS

➲ Ground the equipments.

Use the equipment only in a well-ventilated area to prevent from serious body injuries, fire and explosion hazards. Do not smoke in the spray area.

Never stock paints and solvents in the spray area. Always close the pots and the tins.

Keep the spray area clean and free from debris (solvent, rags,…).

Read paint and solvent manufacturer's technical instructions.

Spraying of some materials may result in hazardous working conditions. To protect the operator, respirator mask, hand cream and glasses are required (Refer to chapter "Safety equipment" of KREMLIN selection guide).

■ EQUIPMENT REQUIREMENTS

The operating pressure of these equipments is particularly high. Consequently, some precautions must be taken in order to prevent from accidents and from unsafe working conditions.

➲ **Never exceed the components maximum working pressure of the equipment.**

HOSES

Do not use hoses with a maximum burst-proof pressure less than four times the maximum service pressure of the pump (see data sheet).

Be certain hoses are not crimped, leaking and not unrolled.

Be certain hoses are in good conditions and showing no evidence of damage.

➲ **Use only air hose with static conductor to connect the pump with the spray gun.**

All fittings must be tight and in good condition.

PUMP

➲ **Ground the equipment (use the connection on the pump).**

Do not use any product or solvent incompatible with the pump components.

Use the appropriate solvent for the material being sprayed to increase the equipment working life.

GUN

Never wipe the end of the tip with the fingers.

Always depressurize air and fluid hoses before carrying out any servicing on the gun.

Never point the spray gun at anyone or at any part of the body.

CYCLOMIX™ MICRO

➲ **Do not install the machine in an explosive area. It shall be in a safe area (non explosive area).**

➲ **The display unit must be moved 1 m / 3.3 ft away from the fluid module and not be installed above that one.**

➲ **Connect the control box to the mains supply fitted with a ground.**

➲ **The fluid module is fitted with a ground. Connect the ground cable to earth.**

➲ **Do not use any product or solvent incompatible with the machine components.**

➲ **Use the appropriate solvent for the material being sprayed to increase the equipment working life.**

➲ **Wear protective glasses to protect the operator from possible discharges during the handling of the CYCLOMIX ™ MICRO machine test valves.**

➲ **Do not use electrostatic spraying for water-based paints with a resistivity lower than 5 MΩ.**

■ MAINTENANCE REQUIREMENTS

➲ **Never modify these equipments.**

Check them daily, keep them in a good condition and replace the worn parts **only with KREMLIN parts.**

Before cleaning or removing components of the equipment, it is compulsory :

1 - to stop the air supply,

2 - to open the gun fluid circuit to depressurize the hoses,

3 - to shut off the machine electrical supply,

4 - to open the drain valves.

■ ENVIRONMENT

	The equipment consists of a label plate with the name of the manufacturer, the equipment part number, the interesting informations to use correctly the equipment (pressure, voltage…) and the above pictogram. The equipment is designed with and consists of high quality materials and components which can be re-used. The 2002/96/EC European Directive covers all equipments with a crossed-out bin pictogram. Please inform yourself about the collection systems for electric and electronic equipments. Please act according to local rules and **do not throw the old equipments with household wastes.** A correct disposal of the old equipment will help prevent negative consequences for the environment and health.

3. DESCRIPTION

The CYCLOMIX™ MICRO mixing machine is designed for applying two-component paints and varnishes (water-based or solvanted).

It is available for 2 technologies of application : pneumatic spraying, AIRMIX ® spraying (maximum pressure : 172 bar / 2500 psi).

It comes in an independent form. It is only supplied with compressed air (maximum 6 bar / 87 psi) and a mains supply (115V / 230V).

It consists of :

- a control bay (2) with automaton and electromagnetic control components,
- a fluid module (1) that receives the volumetric meters, the automatic valves for materials and solvents and electropneumatic control components.

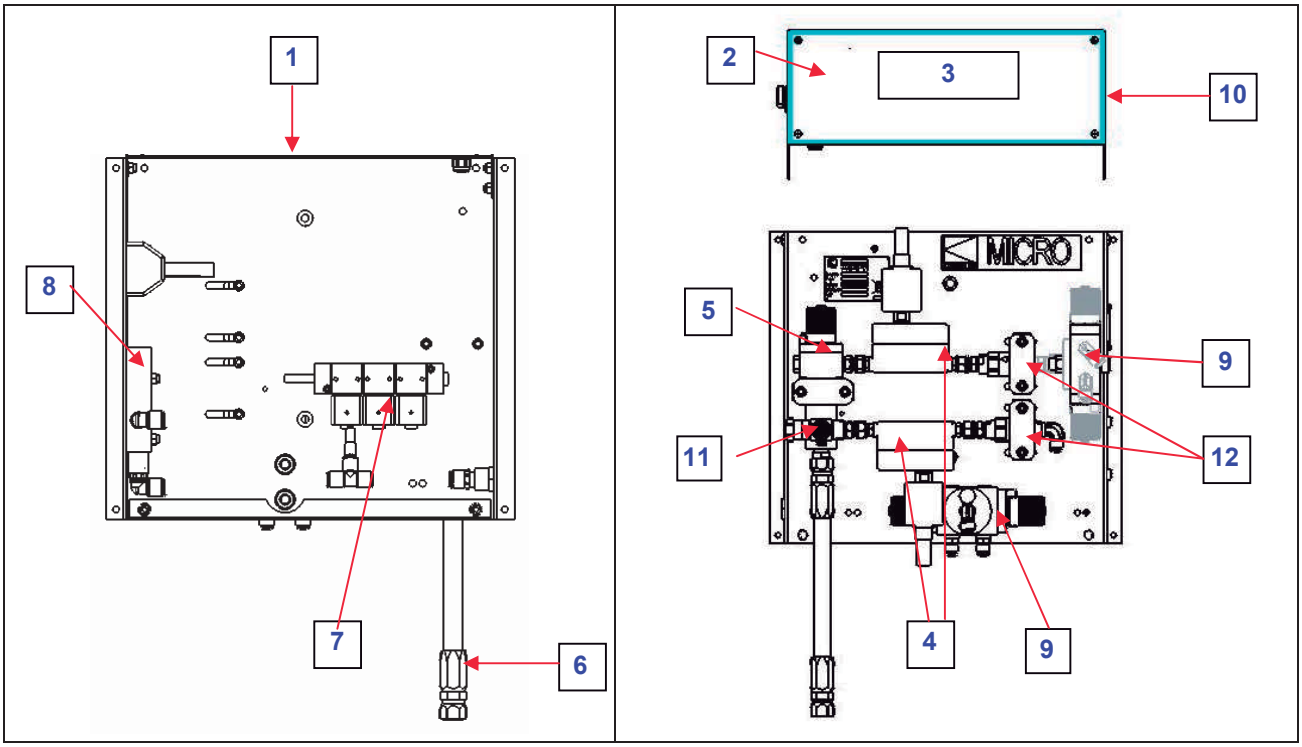

Captions :

1	Fluid module
2	Control bay
3	Display unit
4	Volumeters
5	Automatic valve
6	Mixer

7	Electrovalves
8	Air flow switch
9	Color changer
10	Protective housing
11	Three-way valve
12	Non-return valve

BAY FRONT PART

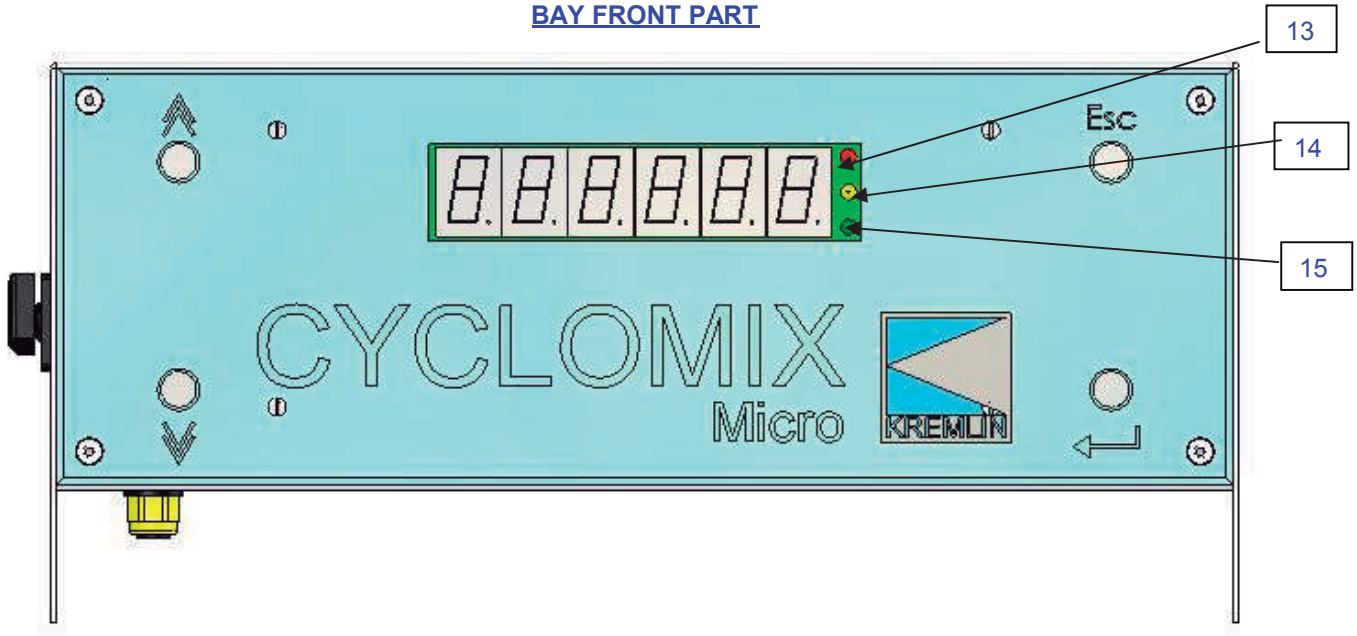

Ind.	Description	Function
13	Red LED	Fault
14	Orange LED	Operating (except production)
15	Green LED	Production

The machine is totally programmable via a man/machine interface. The screen indicates continuously by a simple identification, the statuses of the machine and enables to have access to the essential functionalities: ON / OFF - FLUSHING -PRODUCTION

The informations relating to the operating of the machine (real-time display of the ratio, of the consumption…) can be read on the LCD screen.

The CYCLOMIX™ MICRO saves continuously the instantaneous consumptions of base, catalyst and solvent as well as the total consumptions and the emissions of Volatile Organic Compounds (VOC) during the operating of the machine.

On the machine bay, there is a cord grip. It enables to supply electricity to the machine via a safety isolating switch (115V / 230V).

Do not use electrostatic spraying for water-based paints or paints with a resistivity lower than 5 MΩ.

4. OPERATING PRINCIPLE

The 2 BASE and CATALYST materials are sent to the mixing machine from 2 pumps or pressure tanks.

The base crosses a piloted valve (A1) and a meter (CA), the catalyst is directly sent to the meter (CB). The cycle begins with the opening of the BASE valve (A1). The 2 meters send their informations to the computer that shuts off the catalyst valve (VP6) when the computerized mixing ratio is reached.

The mixing process is based on a base constant flow. The catalyst flow is injected low under high frequency. The injection is made directly into the base flux at the mixer level.

The automaton checks continuously the mixing ratio and if it notices a fault that it cannot correct, an alarm is activated. The machine goes on safety mode.

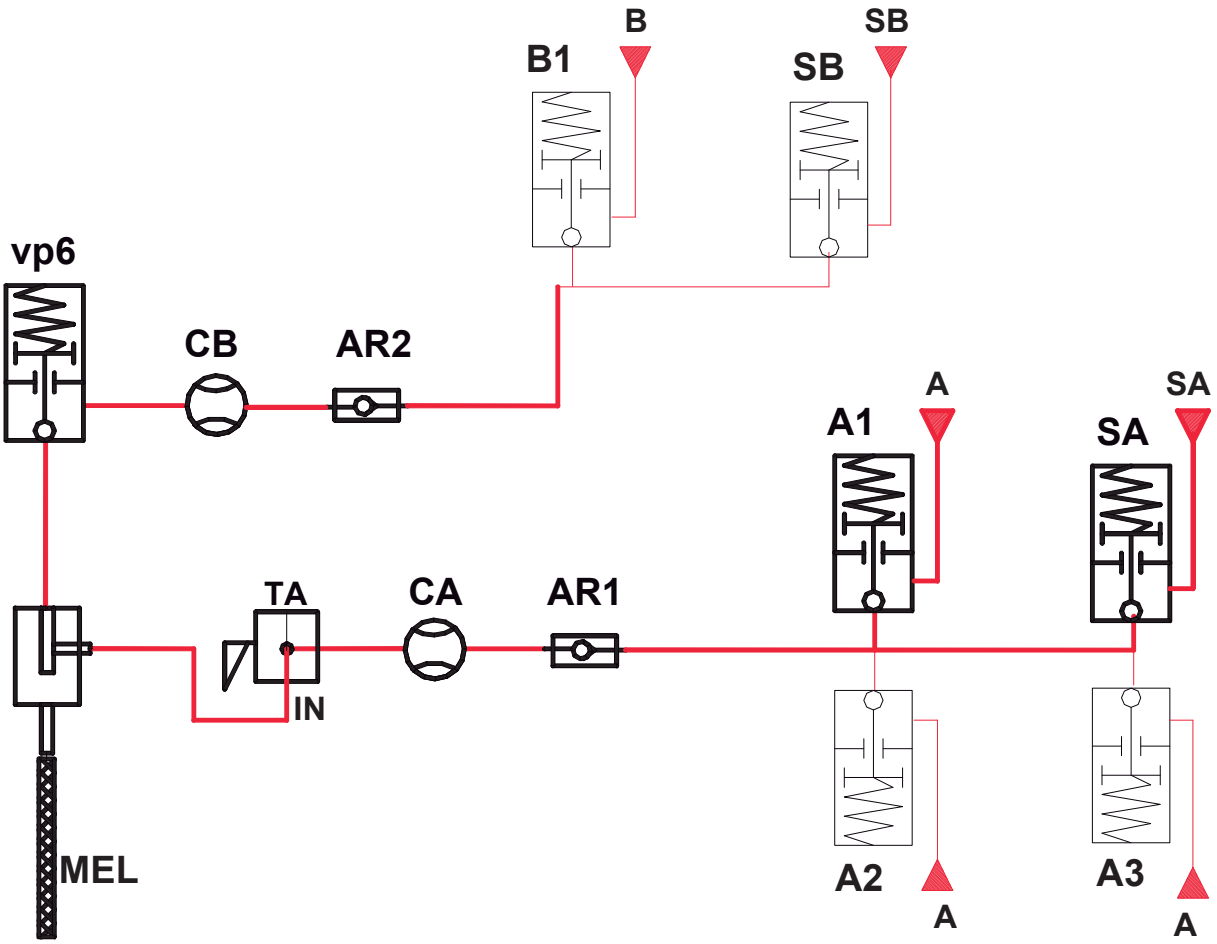

A1	Base piloted valve (A)
SA	Base solvent piloted valve(SA)
A2	Base piloted valve (depending upon version)
A3	Base piloted valve (depending upon version)
B	Catalyst piloted valve (depending upon version)
SB	Cata solvent piloted valve (depending upon version)

IN	Three way-valve to mixer
TA	Sampling outlet for the base
CA	Base meter
CB	Cata meter
VP6	Injection piloted valve
MEL	Mixer

5. TECHNICAL FEATURES

Number of colors : 1 or 3 Number of catalyst : 1 Solvent paints compatibility Piloting via magnet on the control bay	Voltage : 230V / 115V - 10W Minimum air pressure : 4 bar / 58 psi Fluid pressure: from 2 to 175 bar / from 29 to 2538 psi Weight : 25 kg / 55 lb Dimensions : - control bay : 370 mm x 172.5 mm x 110 mm / 14.6" x 6.8" x 4.3" - fluid module : 370 mm x 460 mm x 110 mm / 14.6" x 18.1" x 4.3" Fluid circuits (base and cata) made of stainless steel for the Cyclomix™ Micro and Micro+. CATALYST circuit made of 316 L stainless steel Circuit for the Cyclomix™ Micro+ PH. Adjustable mixing ratio : 1/0 and from 0,6/1 to 20/1 (BASE volume / CATALYST volume) (0% and from 166% to 5%) Measure precision : 1 % Mixed fluid flow : from 50 to 2000 cm3/mn Solvent flow : 7000 cm3/mn Fluid viscosity : from 30 to 5000 cps
Mixing permanent check Adjustable threshold alarm Adjustable pot-life indicator Automatic mixing control cycle Automatic flushing cycle (time) VOC display Total indicator for base, catalyst and solvent consumption	**OPTION :** *Auto-wash (gun support) You cannot go to production with the auto-wash, no connection to the machine. *Print option (connection to a printer) *Connecting cable (7 m) option

Different versions of the CYCLOMIX™ MICRO :

Configurations	BASE	CATALYST
CYCLOMIX™ MICRO	1 base + 1 solvent	1 cata
	3 bases + 1 solvent	1 cata
CYCLOMIX™ MICRO +	1 base + 1 solvent	1 cata + 1 solvent
	3 bases + 1 solvent	1 cata + 1 solvent
CYCLOMIX™ MICRO+ PH	1 base + 1 solvent	1 cata + 1 solvent
	3 bases + 1 solvent	1 cata + 1 solvent

The control bay is the same for all the versions of the CYCLOMIX™ MICRO.
You can change the configuration displacing the shunt located on the µ card (J7 terminal) - (refer to"Annexes" - electric diagram, folio 2).

6. INSTALLATION

■ DESCRIPTION OF THE LABEL MARKINGS

The CYCLOMIX™ MICRO machine is fitted with 2 label markings : a label marking on the control bay and the other one on the fluid module.

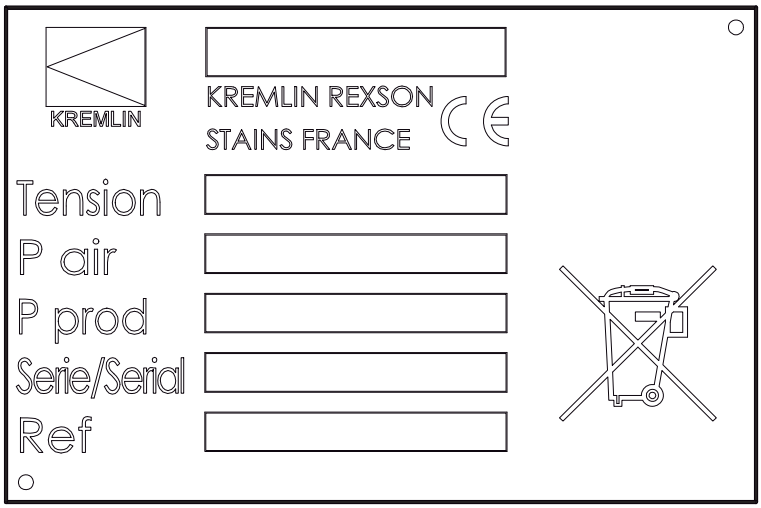

Marking label on the control bay

(bay located **outside** the spray booth)

Marking label on the fluid module

(fluid module located **outside** the spray booth → marking in accordance with the ATEX directive)

Marking in accordance with the ATEX directive

KREMLIN REXSON STAINS FRANCE	Name and address of the manufacturer
CE II 3 G	**II** : group II **3** : class 3 Surface equipment meant to area where explosive atmospheres due to gas, vapours, mists are not liable to appear from time to time in usual operating or if they appear nevertheless, it is for a short duration. **G** : gas
P air : 6 bar / 87 psi	Maximum air pressure
P prod : 175 bar / 2536 psi	Maximum fluid pressure
Ref	CYCLOMIX™ MICRO machine part number

Caution!
The CYCLOMIX™ MICRO mixing machine must be installed outside the explosive area. It must be installed in a safe area (non explosive area according to the ATEX directive).

The display unit must be moved 1 m / 3.3 ft away from the fluid module and not be installed above that one.

The control bay must be connected to a mains supply fitted with a ground.

The ground of the fluid module must be grounded.

■ INSTALLATION DIAGRAM

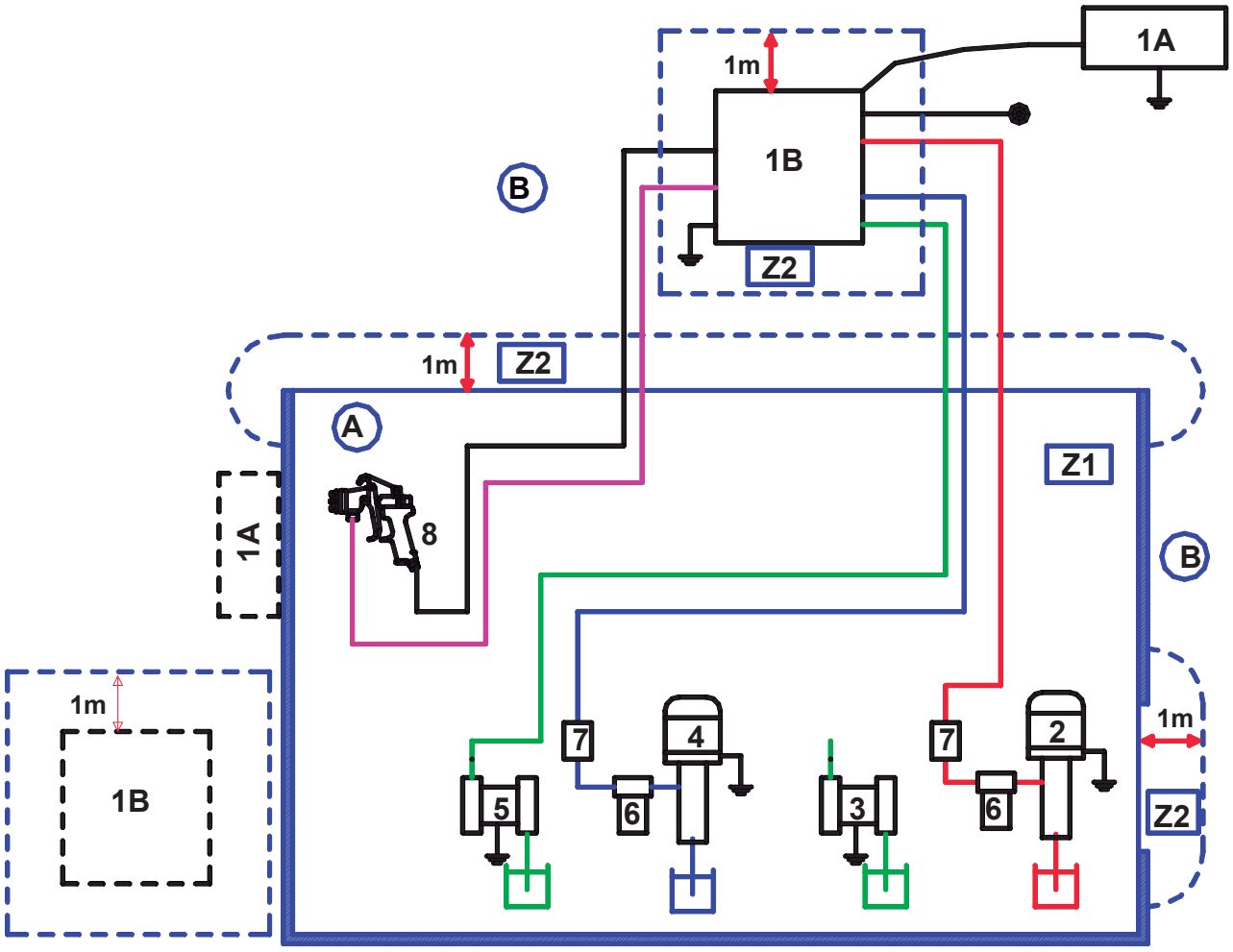

A	Explosive area : area 1 (Z1) or area 2 (Z2) (spray booth)
B	Non explosive area (safe area)
1A	CYCLOMIX™ MICRO control bay
1B	CYCLOMIX™ MICRO fluid module
2	CATA pump
3	SOLVENT pump (cata)

4	BASE pump
5	SOLVENT pump (base)
6	Filter
7	Fluid pressure regulator
8	Gun

Nota : To connect the SOLVENT pump (CATA) to the CYCLOMIX MICRO machine :

- choose a machine set up with 1 catalyst and one cata solvent,
- or disconnect the CATA hose at non-return valve level (CATA) of the machine and replace it connecting the SOLVENT hose (CATA).

The 1 m distance indicated in the diagram is given for your information only and KREMLIN REXSON shall not be liable for it. The user is liable for the exact delimitation of the zones which depends on the materials used, the material environment and the use conditions (refer to EN 60079 -10 standard).

The 1 m distance can be adapted if the analysis the user carries out calls for it.

■ IMPLANTATION

There are different ways to install the CYCLOMIX™ MICRO to answer to the majority of installations.

Caution! The display unit must be moved 1 m / 3.3 ft away from the fluid module and not be installed above that one.

Assembly for piloting outside the booth :

The machine gets two parts to enable the mismatch of the control part (1.80 m / 6 ft cable between the 2 components).
There is a 7 m / 23 ft extension available in option.

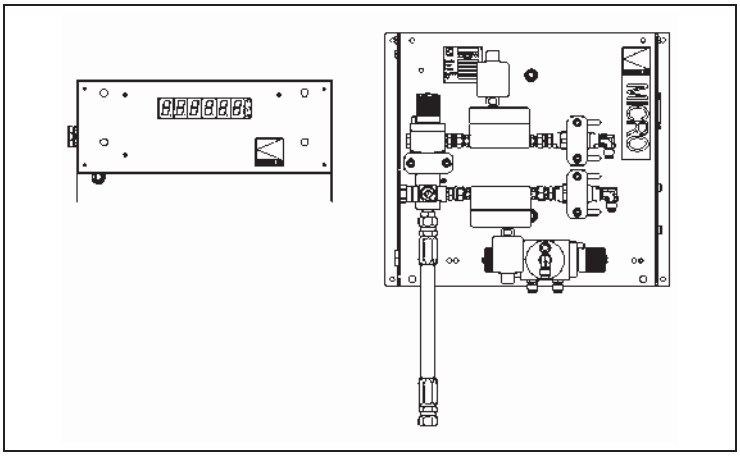

Assembly for piloting in the booth :

There is a control kit in booth (available in option).

That kit enables to fix the control box on the spray booth by means of a glass sheet and to pilot that one inside. The piloting is carried out thanks to a magnet provided with the machine. The distance between the control box and the fluid part is of 1.80m / 6 ft (cable provided with the machine).

There is a 7 m / 23 ft extension available in option.

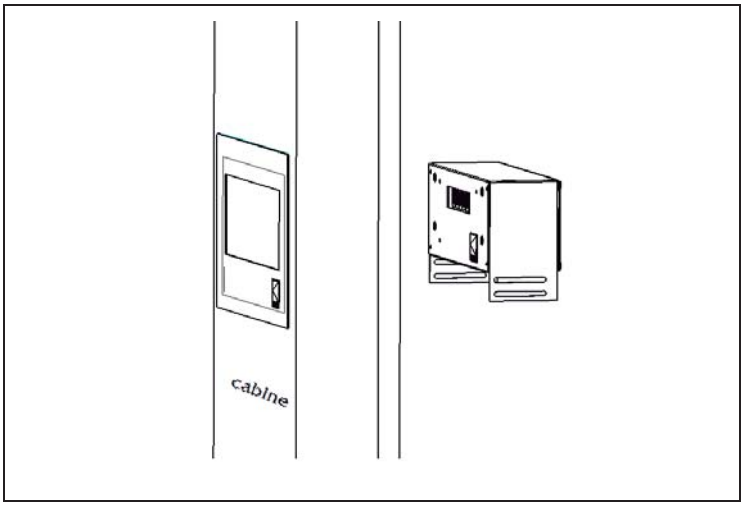

■ CONNECTION OF THE CONTROL BAY AND OF THE FLUID PART

➲ The CYCLOMIX™ MICRO must be connected to a dry and clean compressed air (minimum 4 bar / 58 psi) and to a single phase electric supply (115 V / 230V) connected to an isolating switch. The network ground will be connected in the control bay on a contact provided.

Before connecting the CYCLOMIX™ MICRO, be certain the mains voltage is the same than the one of the machine (230 V).
If no, open the electric box removing the protective housing (10) and shift the staple (230V → 115V).

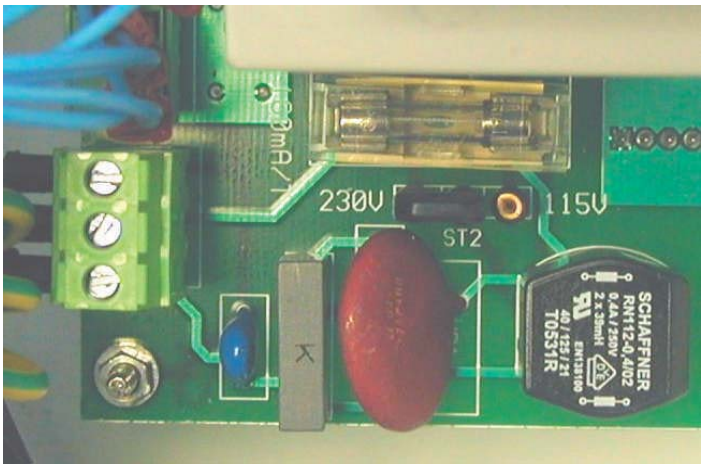

The air connection of the machine is Female 1/4 G (air inlet = R1 and air outlet = R2).

The connection between the control bay and the fluid module is carried out via the provided cable, length 1.8 m / 6 ft , a cable, length 7 m / 23 ft is also available (option). For lengths up to 7 m / 23 ft connect the cables between them (male-female).

A valve fitted with fittings is supplied with the machine. It will be mounted on the gun air inlet : it enables to shut off quickly the fan air (priming, flushing stage).

Connection of the fluid inlets :

The fluid inlets are M 1/2 JIC.

➲ **We advice you to install AIRMIX filters on the fluid inlets (catalyst and base).**

The base(s) and the base solvent are connected on the color changer installed on the machine.

The catalyst is connected :

- directly on the elbow installed before the non-return valve,

- or on the color changer (cata and cata solvent) installed in the machine.

It depends upon the configuration of the machine.

The air connection is made on the two G 1/4 connecting parts.

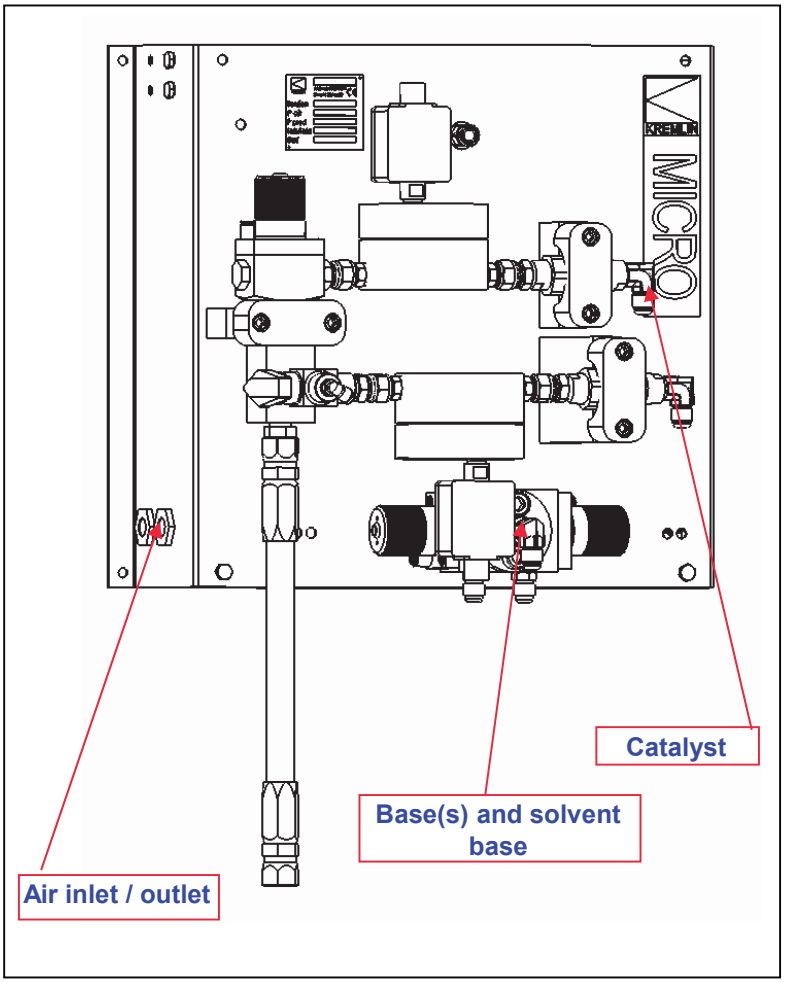

Assemble filters at the outlet of the BASE and CATA pumps.

Assemble pressure regulators at the outlet of the BASE and CATA pumps.

Install the fluid and air hoses between the pumps and the CYCLOMIX™ MICRO, and between the CYCLOMIX™ MICRO and the gun. When choosing the fluid hoses, comply with the pressures delivered by the pumps. For the air hoses, install **non-static** hoses.

Unscrew the regulators before supplying air to the installation.

Check that the three way-valve is in the IN fluid circuit sense and not in the TA circuit sense.